118.740”

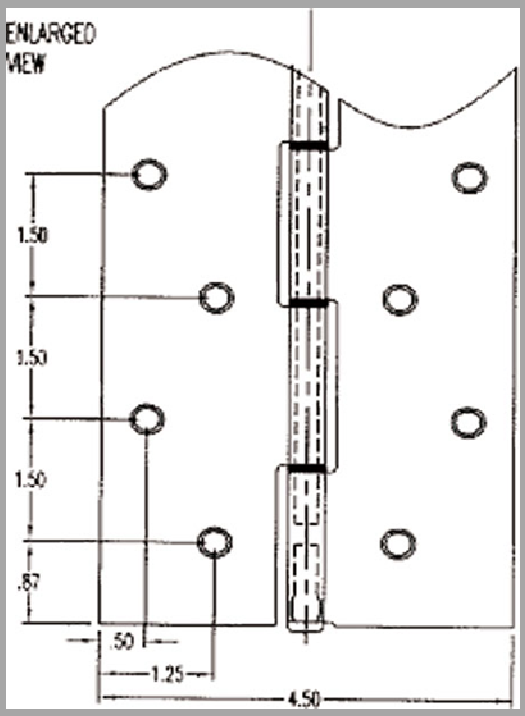
ENLARGED
VIEW
1.50
1.50
1.50
.87
.50
1.25
4.50

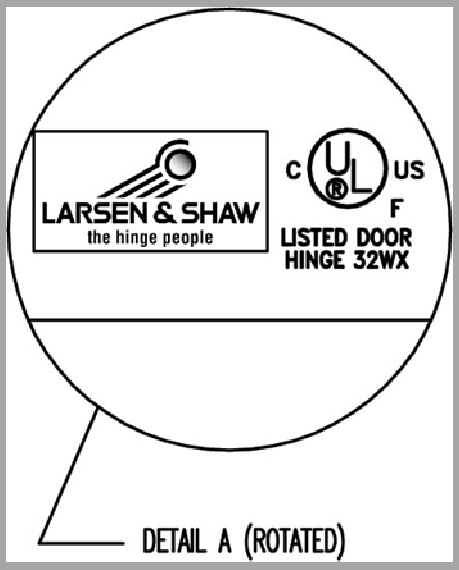
LARSEN & SHAW
the hinge people
c UL US
F
LISTED DOOR
HINGE 32WX
DETAIL A (ROTATED)

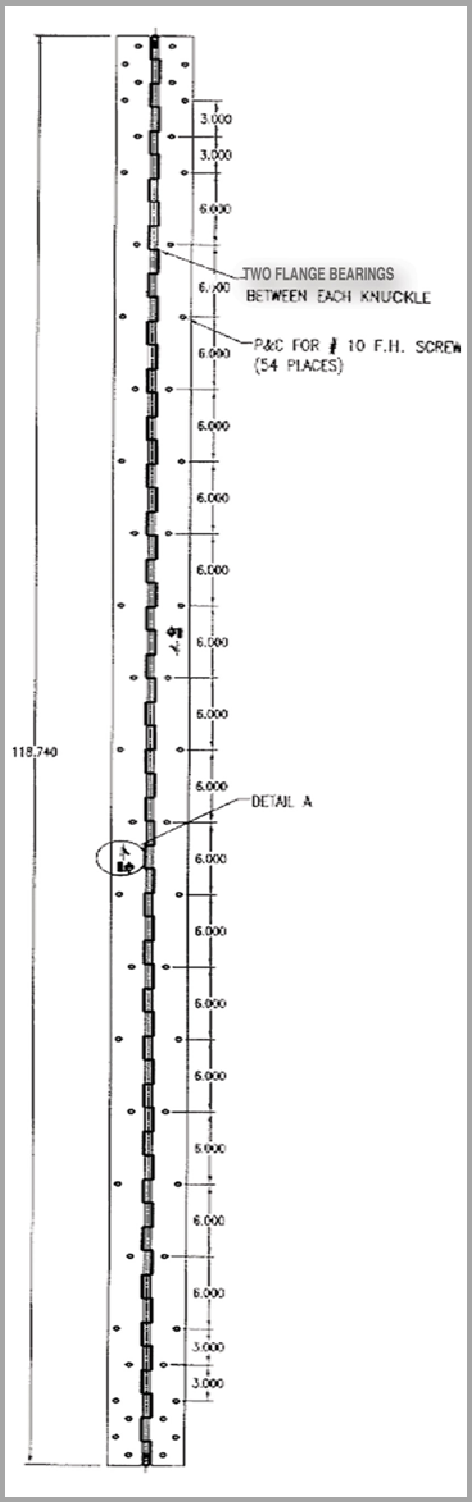
TWO FLANGE BEARINGS
BETWEEN EACH KNUCKLE
P&C FOR # 10 F.H. SCREW
(54 PLACES)
DETAIL A
118.740
3.000
3.000
6.000
6.000
6.000
6.000
6.000
6.000
6.000
6.000
6.000
6.000
6.000
6.000
6.000
6.000
6.000
6.000
6.000
3.000
3.000