LARSEN & SHAW
the hinge people

575 DURHAM ST. W.
WALKERTON ON N0G 2B0
(519) 881-1320

HINGE – SWING CLEAR

83.118" STAINLESS STEEL HINGE
CATALOGUE #: 226-7
L&S PART #: 1414SW2SS
FINISH: BRUSHED
PACKED: INDIVIDUALLY, WITH
10 WOOD & METAL SCREWS
LEAVES: .075 ST.ST.
PIN: .187 ST.ST.
ALL DIMENSIONS ARE IN INCHES

TYPICAL INSTALLATION

DO NOT SCALE

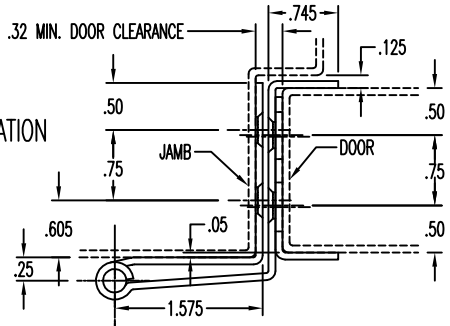

SWING CLEAR – APPLICATION VIEW

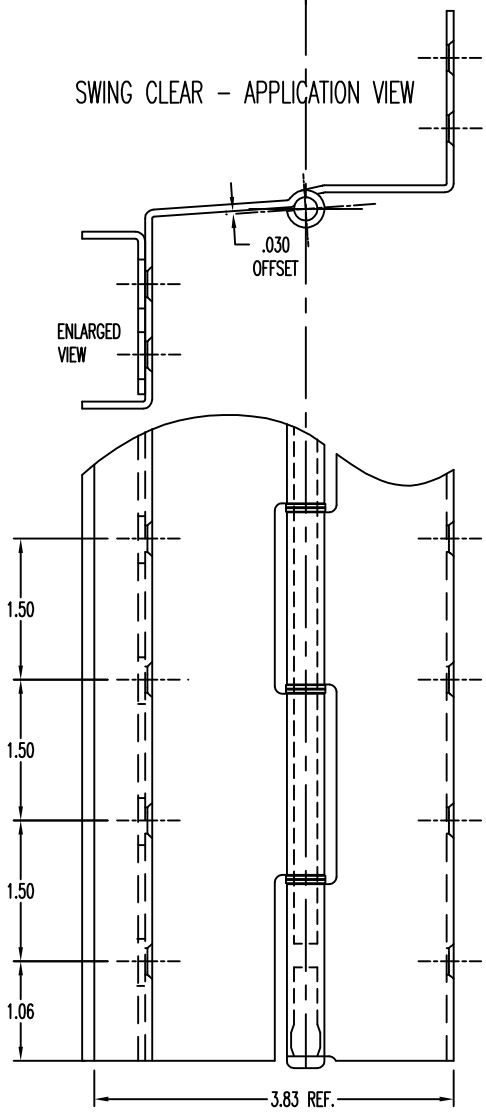

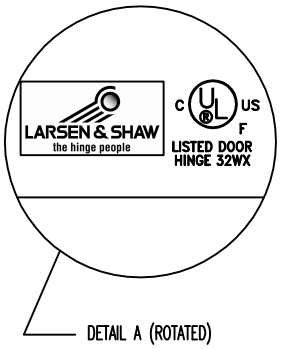

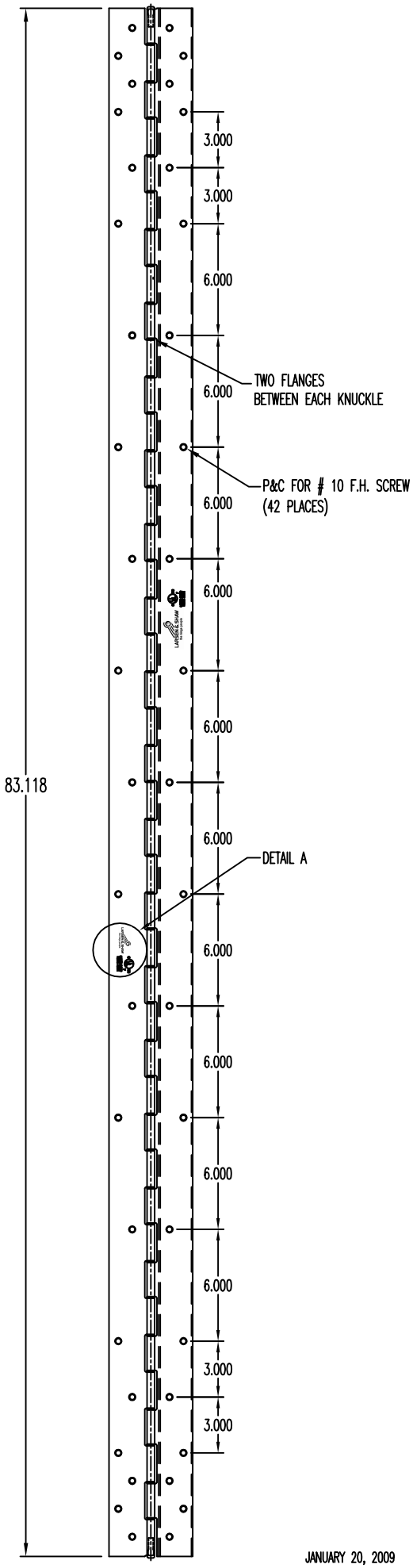

MANUFACTURER RESERVES THE RIGHT TO CHANGE DESIGN WITHOUT NOTICE

TEMPLATES\1414SW2-TEMPLATE.DWG

JANUARY 20, 2009