LARSEN & SHAW
the hinge people

575 DURHAM ST. W.
WALKERTON ON N0G 2B0
(519) 881-1320

DOUBLE EDGE GUARD

94.992" STAINLESS STEEL HINGE
PART #: 1414259SS
FINISH: BRUSHED
PACKED: INDIVIDUALLY, WITH
10 WOOD & METAL SCREWS
LEAVES: .075 ST.ST.
PIN: .250 ST.ST.
ALL DIMENSIONS ARE IN INCHES

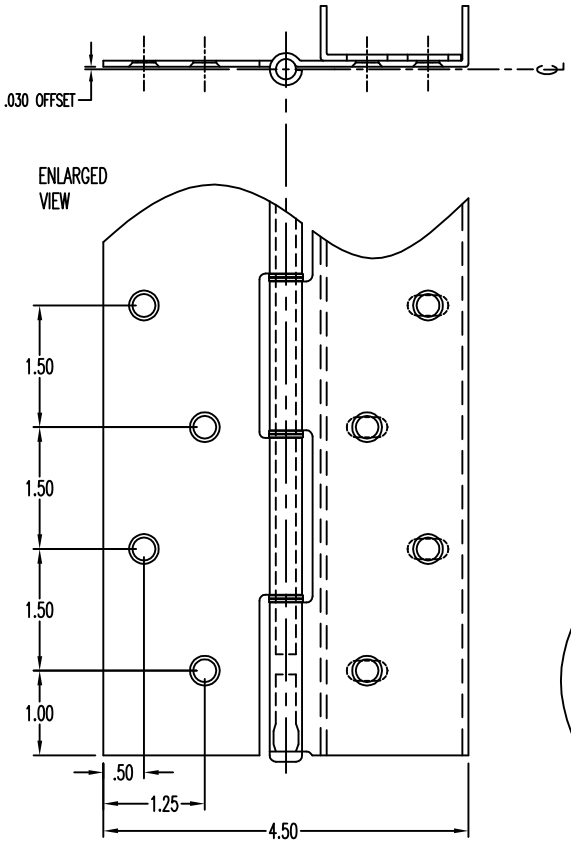

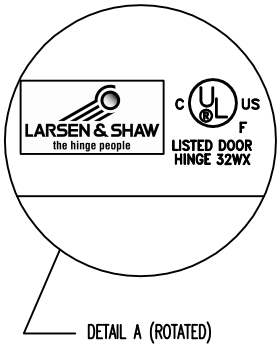

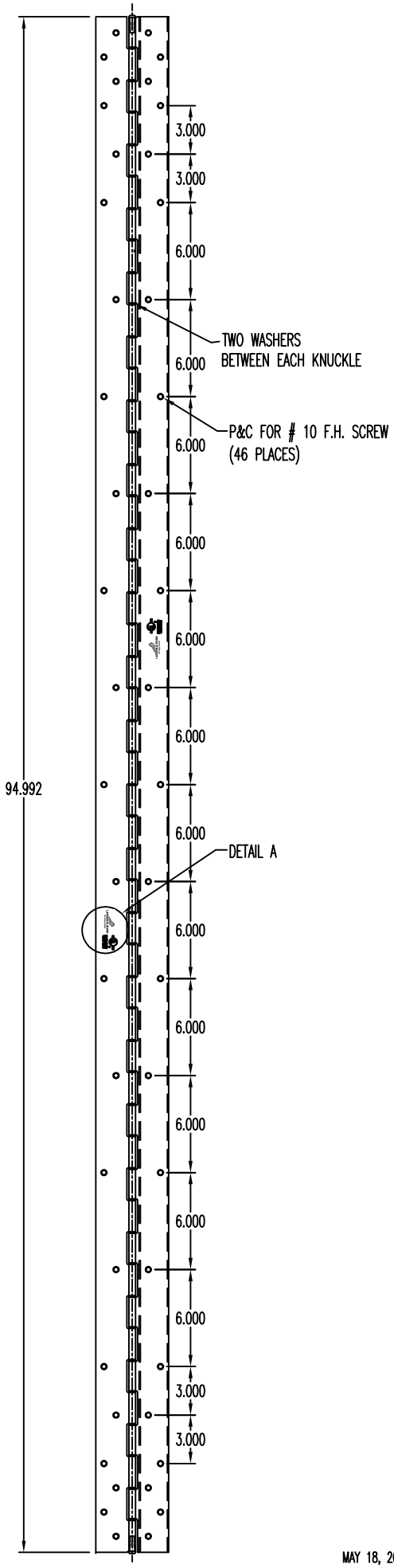

MANUFACTURER RESERVES THE RIGHT TO CHANGE DESIGN WITHOUT NOTICE

MAY 18, 2007